RevNo	Revision note	Date	Signature	Checked

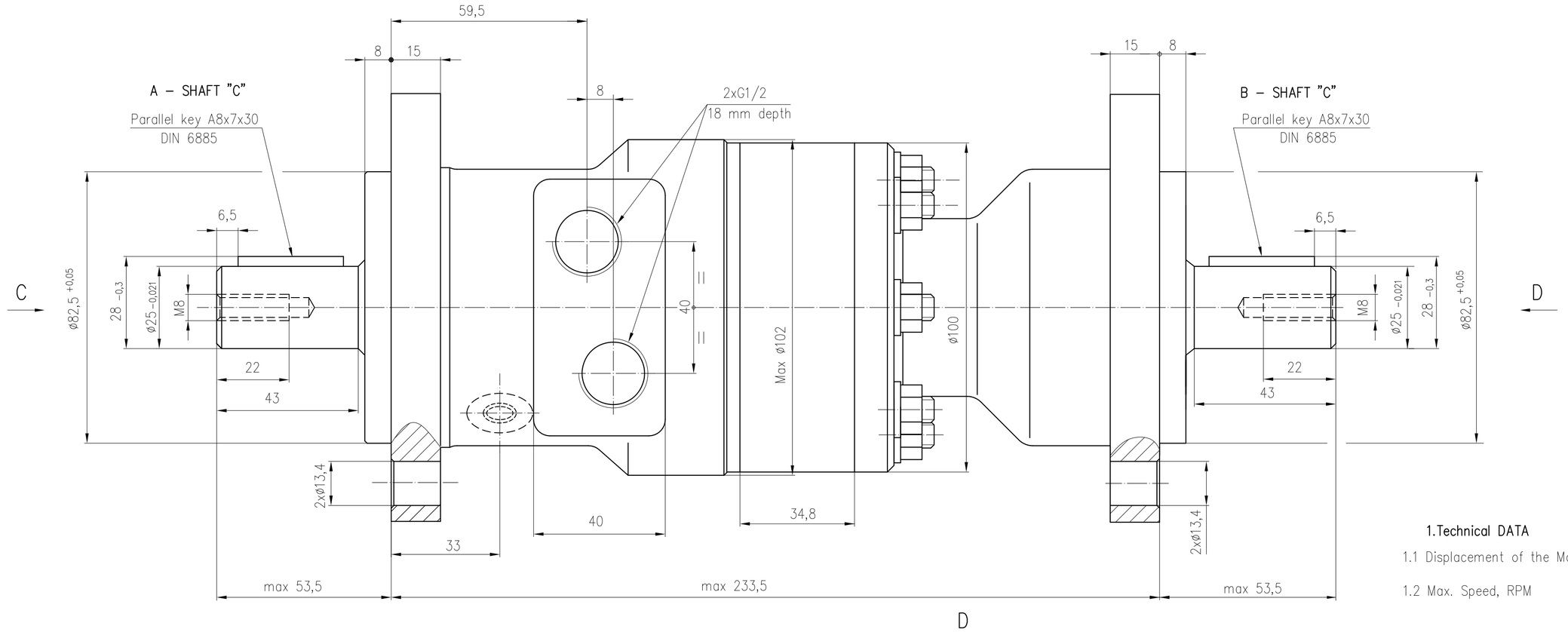

Hydraulic scheme

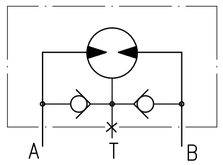

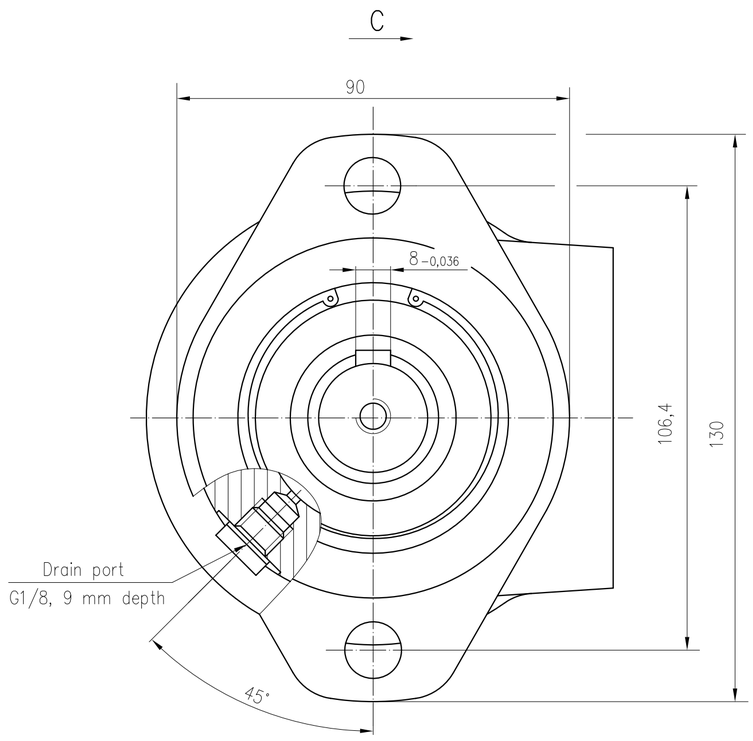

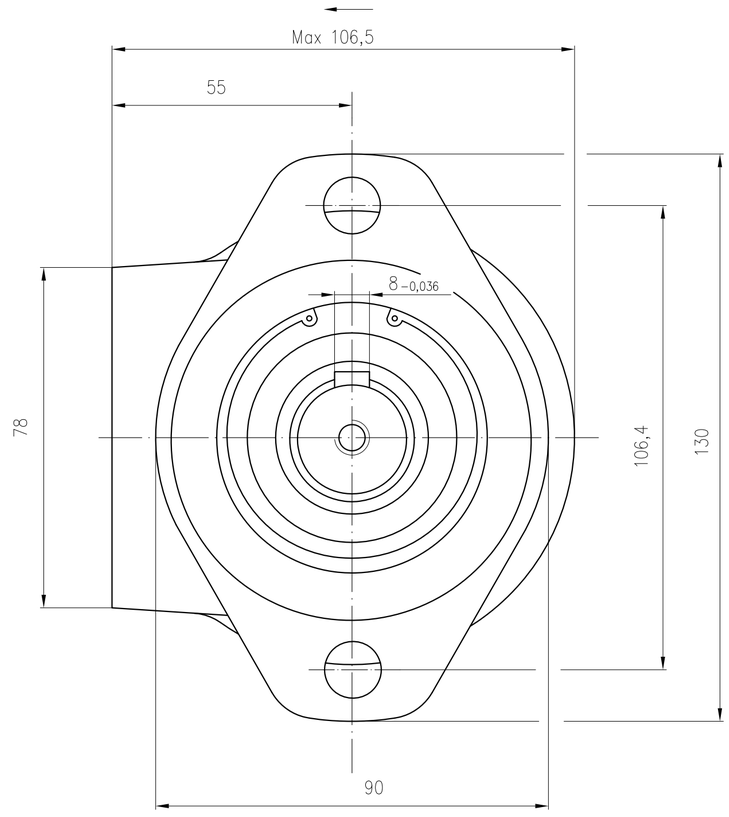

1.Technical DATA

1.1 Displacement of the Motor, cm³/rev		199,8
1.2 Max. Speed, RPM	cont.	300
	int.	375
1.3 Max. Pressure Drop, bar	cont.	110
	int.	140
1.4 Max. Torque, daNm	cont.	30
	int.	39
1.5 Max. Torque – "A" Shaft, daNm	cont.	20
	int.	23
1.6 Max. Torque – "B" Shaft, daNm	cont.	20
	int.	23
1.7 Max. Oil Flow, lpm	cont.	60
	int.	75

FOR APPROVAL

APPROVED BY .....

DATE .....

Itemref	Quantity	Title/Name, designation, material, dimension etc		Article No./Reference	
Material	Weight	Designed by Gadjanova		Date 14.01.2015	Scale
ALKS HYDRAULIC		Hydraulic motors with Dual shaft type MRB200C/C			
				Rev. 0	Sheet 1